2024 Acura Integra Type S L4-2.0L Turbo (K20C8)
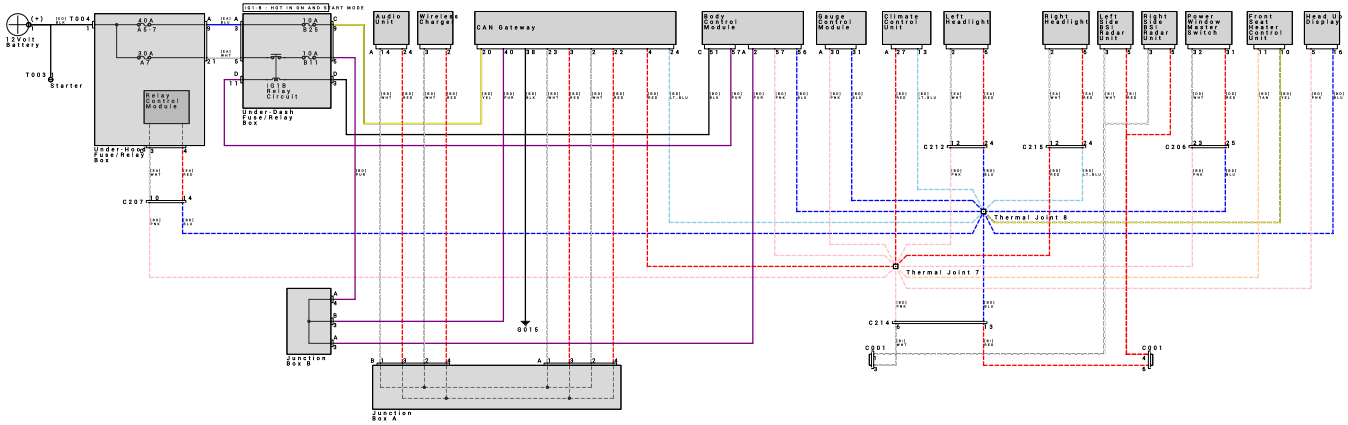
Vehicle > Powertrain Management > Computers and Control Systems > Diagrams > Electrical (OE)